APPENDIX H

Preferred Structure from a Reliability Basis

Tri-Lakes Reliability Project
Preferred Structure from a Reliability Basis

The Project requires a 46 kV structure type that will provide a high degree of reliability over the next 30 years. Two structure types, shown in Figure 1, are compared for their ability to withstand extreme ice loads, long service life expectancy, and ability to avoid electrical outages that are the result of falling limbs/trees. One structure type uses a wood crossarm in a flat configuration (flat), and the other uses porcelain post insulators in a vertical arrangement (vertical). Overall, there is approximately a 10-foot height differential between the two structures.

Subtransmission Line – 46 kV

Distribution Circuit – 4.8 kV

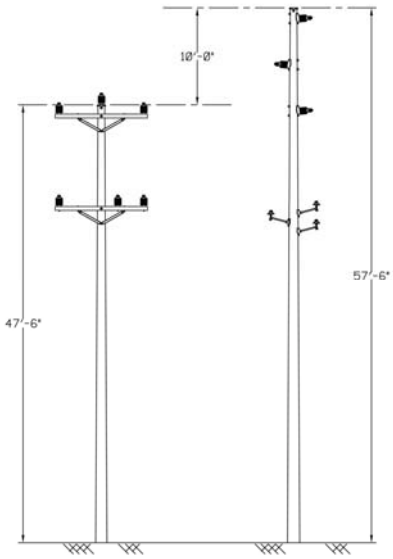

Figure 1

Note: Other utilities not shown, i.e., transformers, secondary cables, and telephone, may not be required at all locations.

With vertical construction, the conductors are separated by 5 feet, a clear advantage, as shown in Figure 2, because of the additional tree height needed to make contact with the conductors in the event of a falling tree or limb. If a tree or limb should fall into a line with crossarm construction, the likelihood is that all three phases will slap together, and/or the crossarm/braces will break. Phase to phase contact generally causes the conductor to burn down, a serious outage consequence, and significant disadvantage for the flat construction.

Figure 2

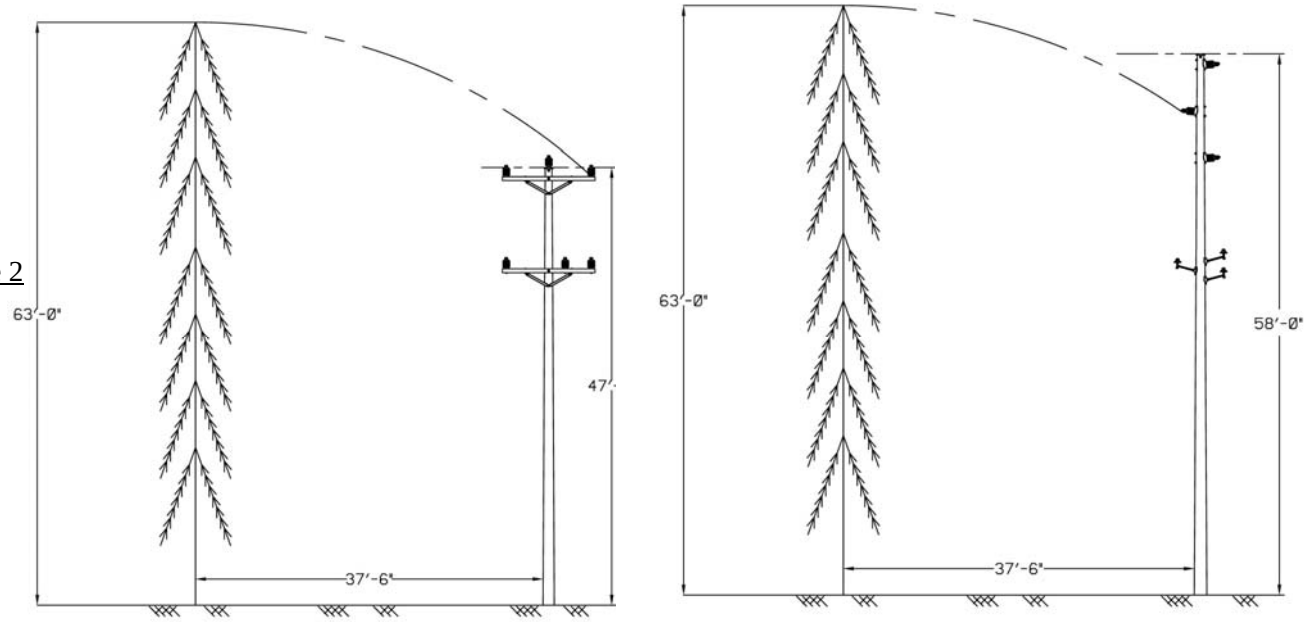

Tri-Lakes Reliability Project
Preferred Structure from a Reliability Basis

Vertical construction keeps the conductors closer to the center of the right-of-way as shown in Figure 3. Because crossarm construction is five to six feet wider, there is more opportunity for falling limbs to make conductor contact. The wider conductor spacing can require increased clearances from the pole placement to other objects. A significant disadvantage when the line is in proximity to buildings. The narrower vertical construction makes maximum use of the ROW, with increased reliability.

Figure 3

Plan View
Looking Down

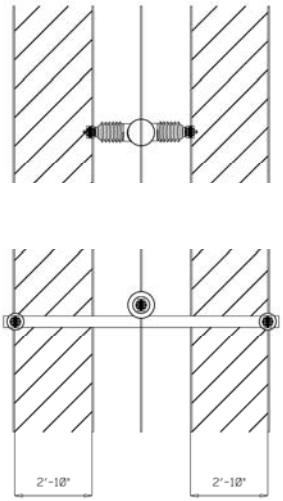

Vertical Configuration

Horizontal Configuration

A comparison based on the ability to withstand extreme ice load clearly favors the vertical construction. Figure 4 shows how the ice load on the porcelain insulators and conductors is concentrated on the crossarm for the flat configuration, but is applied to each post insulator for the vertical configuration.

Wood crossarms, because they are an organic product, have variable strength, and are expected to support the ice load specified by the National Electrical Safety Code (1/2 inch radial ice), and an extreme ice load of one inch of radial ice, which is expected to occur every 5 years in the region, provided the wood crossarm has not deteriorated significantly. The horizontal porcelain post insulators used with the vertical construction have a steel base that will easily last 30 years with no loss of strength, and are expected to support extreme ice loads in excess of one inch of radial ice during that time.

Figure 4

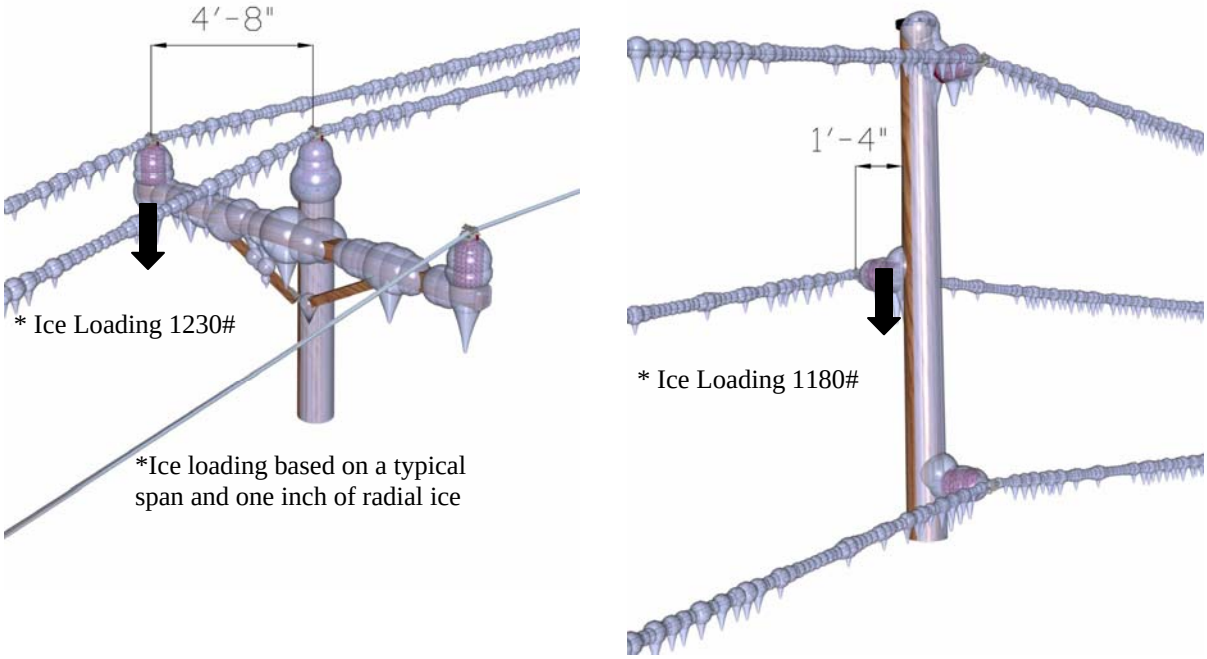

Tri-Lakes Reliability Project
Preferred Structure from a Reliability Basis

Niagara Mohawk's present preferred practice for increased reliability performance on 46 kV sub-transmission facilities is two fold:

- The use of vertical construction.
- Provide a cleared width of 37 ½ feet from the centerline of the line to the tree line, for a total of cleared width of 75 feet.

OUTAGE HISTORY

Sustained Outages from January 1, 1988 to December 1, 1993

A review of an investigation by Niagara Mohawk of outages from January 1, 1988 to December 1, 1993 for the Boonville to Raquette Lake 46 kV sub-transmission line was undertaken to compare the performance of vertical and horizontal type construction. The segments included:

- Alder Creek-Old Forge (S5100 Line)
- Boonville-Alder Creek (S5010 Line)
- Old Forge-Raquette Lake

The results are summarized below. On a total basis, the horizontal configuration has an interruption frequency rate of 2 to 1, compared to the vertical. Any other comparison more than favors the vertical.

		Trees		Accidents		Other		Total	
Type	Mileage	# of Interruptions	Interruption /mile	# of Interruptions	Interruption /mile	# of Interruptions	Interruption /mile	# of Interruptions	Interruption /mile
Horizontal	32.99	29	0.88	20	0.61	10	0.31	59	1.79
Vertical	16.14	4	0.24	6	0.37	5	0.30	15	0.93

The data is presented in interruptions per mile for comparison purposes. The results show that significantly more outages caused by trees occur for horizontal type structures. There are similar results, if accidents are included. However, accidents can be excluded because few of these interruptions are weather related, and are predominately related to emergency repair.

Sustained Outages – January 1, 1995 through August 17, 2005

A review of Niagara Mohawk's data base for sustained outages from January 1, 1995 to August 17, 2005 for three lines with both horizontal and vertical construction shows that reliability is increased significantly using vertical construction, as indicated below.

Alder Creek-Old Forge (S5100 Line) – 212 Structures:

Type	Total No. of Strs.	Number of Outages Reported	Outage Ratio	Outage Rate
Horizontal	69	36	36/(36+69)	35%
Vertical	152	4	4/(4+152)	3%

Tri-Lakes Reliability Project
Preferred Structure from a Reliability Basis

Boonville-Alder Creek (S5010 Line) – 40 Structures:

Type	Total No. of Strs.	Number of Outages Reported	Outage Ratio	Outage Rate
Horizontal	8	11	11/(11+8)	58%
Vertical	32	0	0/32	0%

Alder Creek-Old Forge (S5000 Line) – 261 Structures:

Type	Total No. of Strs.	Number of Outages Reported	Outage Ratio	Outage Rate
Horizontal	154	15	15/(15+154)	9%
Vertical	107	0	0/107	0%

The above data are presented in a format that compares the ratio of outages to the total number of structures for each structure type and clearly shows that the vertical configuration was more reliable than the horizontal. Below is the same interruption report by structure type, excluding vehicular collisions, short circuits, and prearranged outages and on an interruption per mile basis. The results also indicate that the vertical configuration is more reliable than the horizontal:

Alder Creek-Old Forge (S5100 Line) - 211 Structures:

Type	Total No. of Structures	Number of Outages Reported	Outage Ratio	Outage Rate
Horizontal	69	36	36/69	52%
Vertical	152	4	4/152	3%

Boonville-Alder Creek (S5010 Line) - 40 Structures:

Type	Total No. of Structures	Number of Outages Reported	Outage Ratio	Outage Rate
Horizontal	8	11	11/8	137%
Vertical	32	0	0/32	0%

Alder Creek-Old Forge (S5000 Line) - 261 Structures:

Type	Total No. of Structures.	Number of Outages Reported	Outage Ratio	Outage Rate
Horizontal	154	15	15/154	10%
Vertical	107	0	0/107	0%

Tri-Lakes Reliability Project
Preferred Structure from a Reliability Basis

Interruptions on a Per Mile Basis

Type	Mileage	# of Interruptions	Interruption /mile
Horizontal	32.99	62	1.9
Vertical	16.14	4	0.24

In general, the vertical structure is preferred because it does not have a wood cross-arm. The presence of the wood cross-arm makes the horizontal structure less reliable because of its length, its limited strength, and because it is an organic product subject to deterioration.

In summary, the outage data from January 1988 to August 2005 clearly demonstrates that the vertical construction is more reliable than the horizontal, and is the preferred structure type.